Hillmar
Hillmar Industries Ltd.
7371 Vantage Way
Delta, BC V4G 1C9
P:604 946-7115 F:604 946-0329
info@hillmar.com www.hillmar.com

HYD PWR UNIT 08-SMS4EN
HPT08-SMS4EN-MB1V3-075PR3
SPECIFICATION SHEET
SLS & MKTG
ENGLISH

Sheet Number:	
Job Number:	
Form Number:	129-516-73152PT

Company / Project Reference:	Date.:	Page.:	Document Package No.:	Rev.:
		1 OF 1		

Inventor Drawing

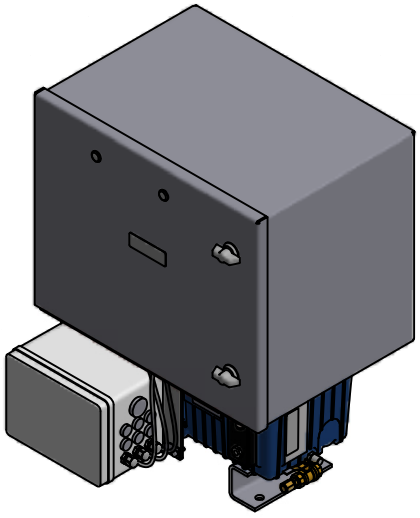

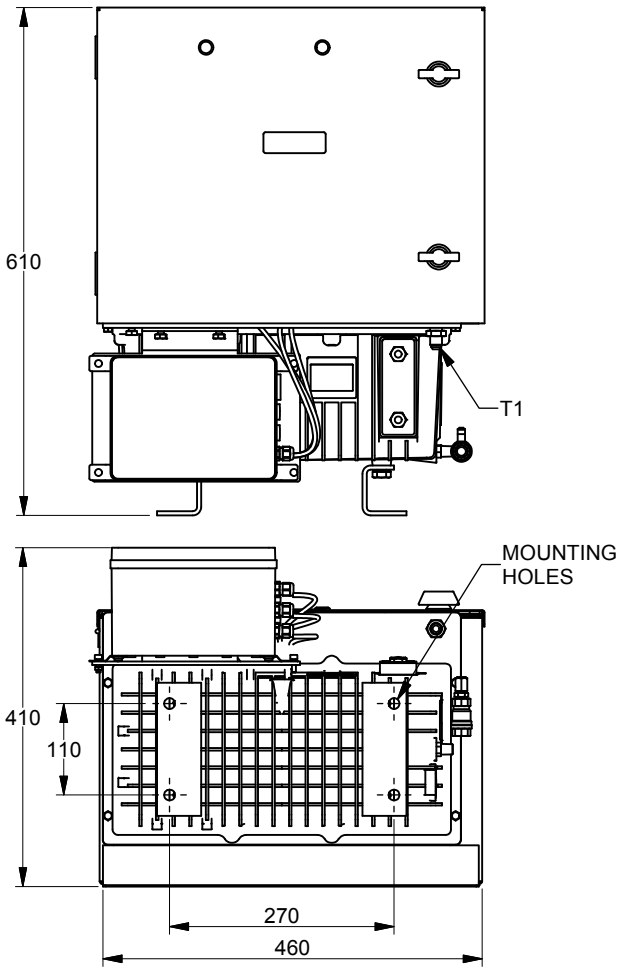

FEATURE	CODE
Hydraulic power unit	HPT
Oil volume	08
Die cast reservoir steel mill	SM
Enclosure SS304	S4EN
Manifold	MB1V3
Motor - pump	075PR3

Example for ordering
HPT08-SMS4EN-MB1V3-075PR3

TECHNICAL DATA

Motor size (kW)	0.75
Oil volume (L)	8
Maximum pressure (MPa)	20
Hydraulic fittings (oil supply) T1	-6 37° JIC
Mounting bolts	4 x M12
Mounting holes	4 x Ø13
Weight w/o oil (kg)	86

NOMINAL SPECIFICATION

Die cast reservoir.

Stainless steel enclosure.

Gear pump and high-pressure outlet filter.

Circuit manifold having check-valve, relief valve, normally open solenoid valve with manual override, pressure gauge with isolation valve, flow control, motor cut-out pressure switch, accumulator with flow control valve.

Control voltage electrical junction box connection to be drilled to suit requirements by customer.

For electrical motor junction box connection see motor specification sheet for details.

NOTES

Hillmar power units can be customized to suit customer's special requirements

All figures are nominal figures only

All dimensions are in millimeters

Document Template #710-101-62058

** ALL TECHNICAL DATA IS SUBJECT TO CHANGE WITHOUT NOTICE **
Hillmar works have a fully registered ISO 9001-2008 quality assurance programme (QCB #01-1525)

C:\TEMP\fc4f7c86-3d26-49bf-b426-e0859571530\5\8000051931 2\HILLMAR\HILLMAR PRODUCTION\01 HYD PWR UNIT\0700-1\07001004 HPT-SM\SPC-SHT-HPT-SM\129-516-73152 HPT08-SMS4EN-MB1V3-075PR3.idw